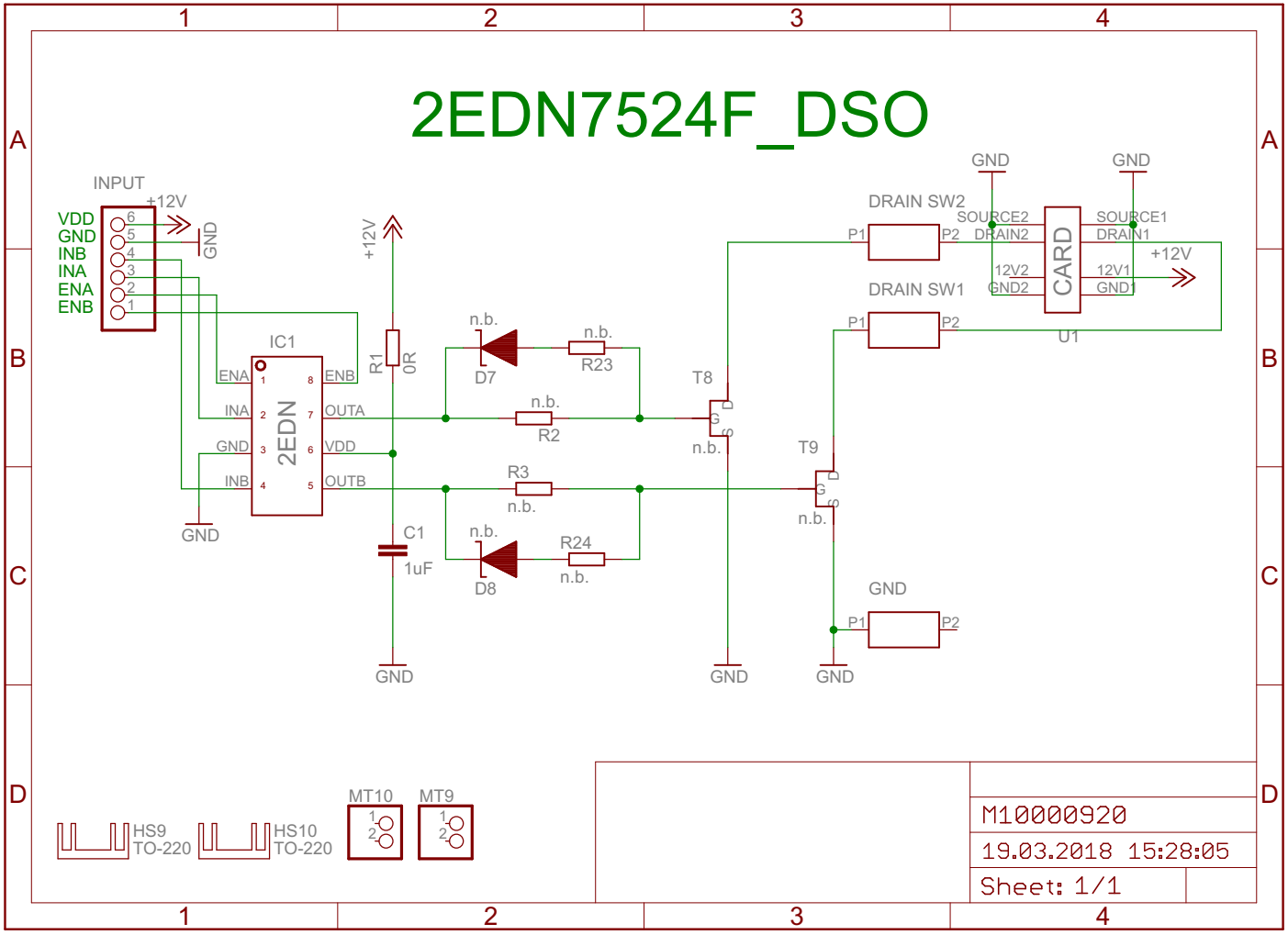
2EDN7524F_DSO
INPUT
VDD
GND
INB
INA
ENA
ENB
+12V
GND
IC1
2EDN
ENA
INA
GND
INB
ENB
OUTA
VDD
OUTB
R1
0R
+12V
n.b.
D7
n.b.
R23
n.b.
R2
n.b.
R3
n.b.
C1
1uF
n.b.
D8
n.b.
R24
n.b.
T8
n.b.
T9
n.b.
GND
GND
GND
GND
DRAIN SW2
P1
P2
DRAIN SW1
P1
P2
U1
SOURCE2
DRAIN2
12V2
GND2
CARD
SOURCE1
DRAIN1
12V1
GND1
+12V
GND
GND
P1
P2
HS9
TO-220
HS10
TO-220
MT10
MT9
M10000920
19.03.2018 15:28:05
Sheet: 1/1